MYIMAGE

PDF PATTERN **S1126**

Skirt "Fanny"

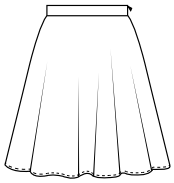

Sizes:

EU 34-52
US 4-22
UK 6-24

Difficulty:

2/5

Instructions:

English

Paper size:

A4 and US Letter

—digital—
PDF
—pattern—

v1.0

General instructions

Thank you very much!

Thank you very much for choosing this pattern! Have you ever made PDF patterns before? No problem if you haven't; in about 2 minutes you will know exactly how it works!

Environment friendly!

There are several ways to offer PDF patterns and every designer has different ideas about it. To minimize wasting expensive ink, we have chosen to place the pattern pieces in a way that you need a minimum of A4/US letter pages.

You can choose between tracing the pattern pieces from the pattern sheet or print a couple more pages so you can start cutting immediately. We give you a choice, you decide!

Materials

Our PDF pattern sheet is very straightforward and easy to put together. For this you'll need the following:
- *A4/US letter printer*
- *A4/US letter pages*
- *Paper scissors*
- *Roll tape*
- *Pencil/pen*
- *Pattern (tracing) paper*

Choose your way

There are two ways to cut out the pieces:

A. You can create a **pattern sheet**, like the ones included with sewing magazines. Then trace the pieces and and cut them out.

- *You only need all A4/US letter pages once*
- *You can re-use the pattern sheet*

B. You can **print all pieces separately**, so you can start cuting them immediately.

- *It take less time in total*

Both ways are described on the following page. Choose a way and follow the rest of the steps.

<-- 5 cm. -->

IMPORTANT:
When printed this square must be exactly 5 x 5 cm. If it isn't, the PDF isn't printed at 100% size. Need help? Please email us!

<-- 5 cm. -->

From PDF to pattern pieces

1. Print this PDF file
IMPORTANT: Make sure you print the PDF at 100% size. Disable the option "Fit to Page".

After printing you can check the size by measuring the square on this page.

Tip: Want to save ink? Print the file without color.

2. Trim the edges of the paper
Trim the edges off the pages at the sides marked with **dotted lines**, see ✂

IMPORTANT: Trim OVER the dotted lines, to trim away the lines. Do this carefully and don't trim away parts of the pattern lines.

3. Lay the pages together and tape them
Place the sides with the same letters together; A to A, B to B, etc. Pick up a page, place it above or below the previous one and tape it together.

IMPORTANT: Place the pattern lines of all pages carefully against each other. All lines should fit smoothly.

Seam allowances

IMPORTANT: All pattern pieces are made without seam allowance. We advise to cut 1 to 1,5 cm. / 0.4 to 0.6" extra for seam allowance and 3 to 4 cm. / 1.2 to 1.6" for the seams.

Need help? No problem!

We have tried to make this pattern as simple as possible with the goal to give you more time for the fun part, the making of the garment itself!

But there is always room for improvement! If you have comments or questions about our patterns, please send an email to **info@madebyoranges.com**. We will try to help you as soon as possible!

More patterns & magazines!

Our PDF patterns, sewing pattern magazines and subscriptions can be found in our international webshop:

www.madebyoranges.com

My Image 22

B-Trendy 16

Miss Doodle 3

Pattern pieces layout

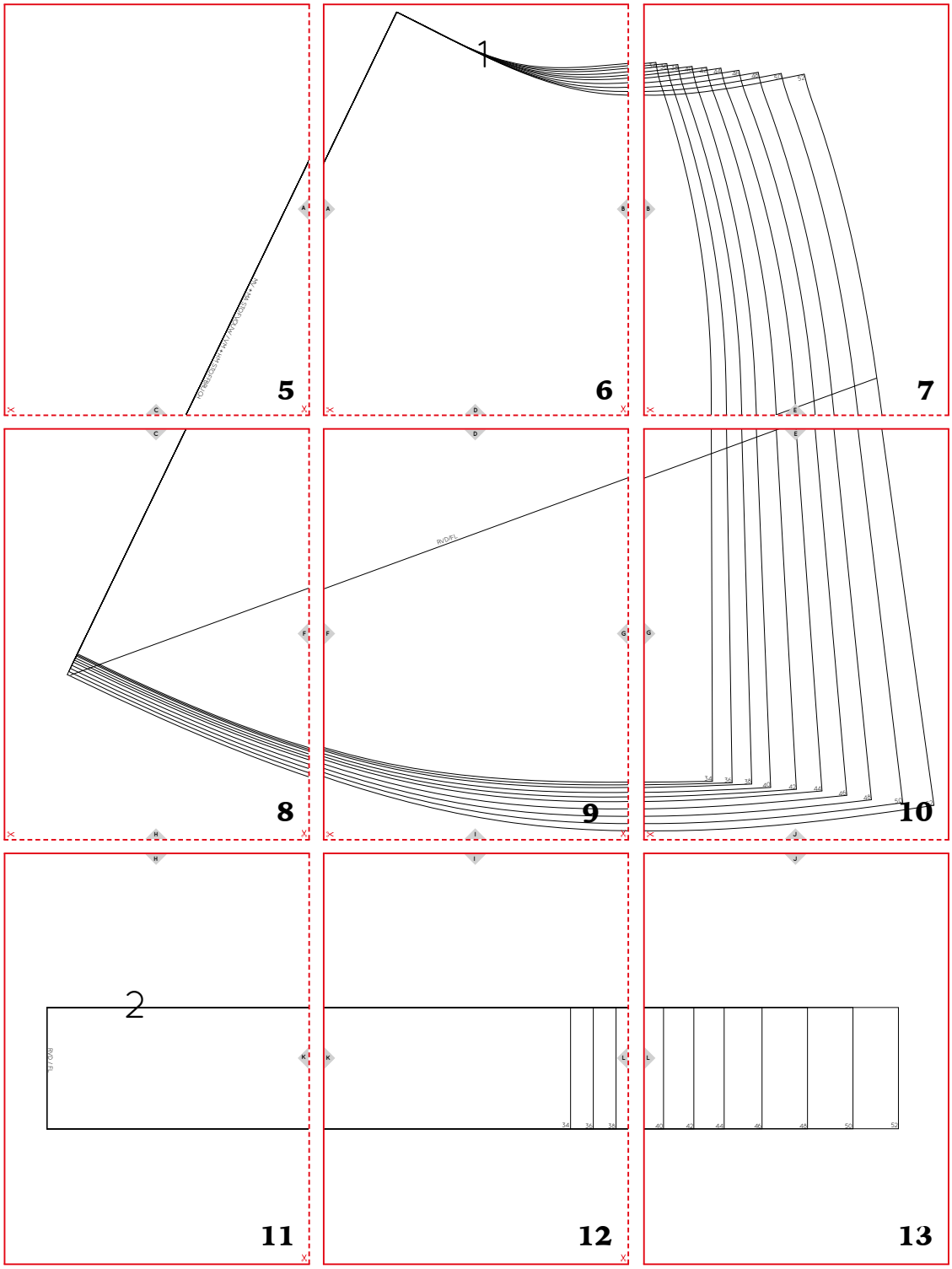

Choose your way

A. Create a pattern sheet

You need all pages once. Lay and tape the pages together, trace the pattern pieces and cut them out.

B. Create separate pattern pieces

To be able to cut out the pattern pieces immediately, you can print all pieces separately. For this way you need some pages printed out several times, see below.

1: p. 5,6,7,8,9,10
2: p. 11,12,13

Print for each pattern piece the mentioned pages, lay the pages of each piece together and tape them. Now you can cut them out immediately.

Instructions

EU sizes: 34-36-38-40-42-44-46-48-50-52
US sizes: 4-6-8-10-12-14-16-18-20-22
UK sizes: 6-8-10-12-14-16-18-20-22-24
Difficulty: 2/5

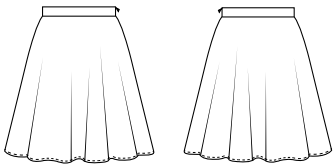

Fabric usage:
110-110-115-120-125-130-135-140 cm

Suggested fabrics:
- Linen
- Linen-Viscose

Skirt length: ± 65 cm.

Materials:
- Thread
- Invisible zipper 22 cm
- Vilene® H200 interfacing

Pattern pieces:
1. Front/back 2x
2. Waistband 2x

Instructions:
1. Iron the Vlieseline®/Vilene® (interfacing) onto the facing sections. Look at the shaded pieces on the fabric layout. 2. Stitch the right hand side seam. 3. Stitch the right hand side seam of the waistband. 4. Stitch the waistband to the right side of the front- and back piece. 5. Stitch the zipper in the left side seam and halfway the waistband. 6. Fold the waistband to the inside. 7. Stitch the joining seam with flat seams on the waist seam. 8. Stitch the left side seam of the waistband with flat seams to the zipper bands (stitch it by hand). 9. Hem the bottom of the skirt with a small hem.

Fabric layout

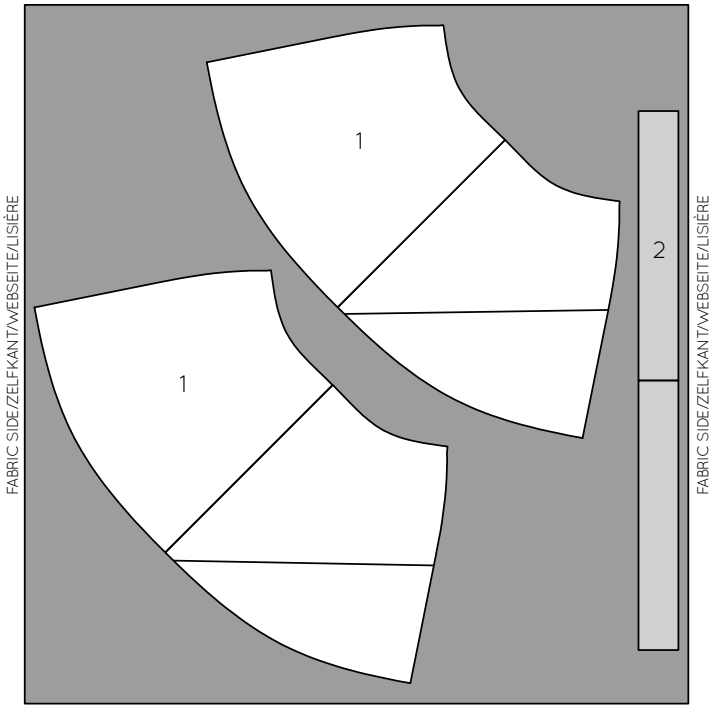

Size chart

A. Chest width
B. Waist width
C. Hip width
D. Back length

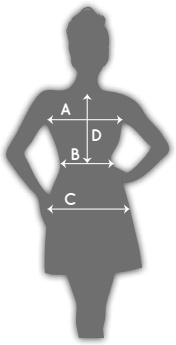

Choose the pattern size that compares best to your measured size.

	34 US 4 UK 6	36 US 6 UK 8	38 US 8 UK 10	40 US 10 UK 12	42 US 12 UK 14	44 US 14 UK 16	46 US 16 UK 18	48 US 18 UK 20	50 US 20 UK 22	52 US 22 UK 24
A	83 cm. 32.7 "	87 cm. 34.3 "	91 cm. 35.8 "	95 cm. 37.4 "	99 cm. 39 "	103 cm. 40.6 "	108 cm. 42.5 "	113 cm. 44.5 "	118 cm. 46.5 "	124 cm. 48.8 "
B	66 cm. 26.0 "	69 cm. 27.2 "	72 cm. 28.3 "	76 cm. 29.9 "	80 cm. 31.5 "	84 cm. 33.1 "	89 cm. 35.0 "	94,5 cm. 37.2 "	101 cm. 39.8 "	107,5 cm. 42.3 "
C	92 cm. 36.2 "	95 cm. 37.4 "	98 cm. 38.6 "	101 cm. 39.8 "	105 cm. 41.3 "	109 cm. 42.9 "	113 cm. 44.5 "	117 cm. 46.1 "	122 cm. 48.0 "	127 cm. 50.0 "
D	41,5 cm. 16.3 "	41,7 cm. 16.4 "	41,9 cm. 16.5 "	42,1 cm. 16.6 "	42,3 cm. 16.7 "	42,5 cm. 16.7 "	42,7 cm. 16.8 "	42,9 cm. 16.9 "	43,1 cm. 17.0 "	43,3 cm. 17.0 "

Body length: 170 cm. / 5'7"

MY IMAGE PDF PATTERN

SKIRT "FANNY"

SIZE 34-52 / US 4-22 / UK 6-24

A

MV + MA STOFVOUW / VM + HM STOFFBRUCH

C

MY IMAGE PDF PATTERN

SKIRT "FANNY"

SIZE 34-52 / US 4-22 / UK 6-24

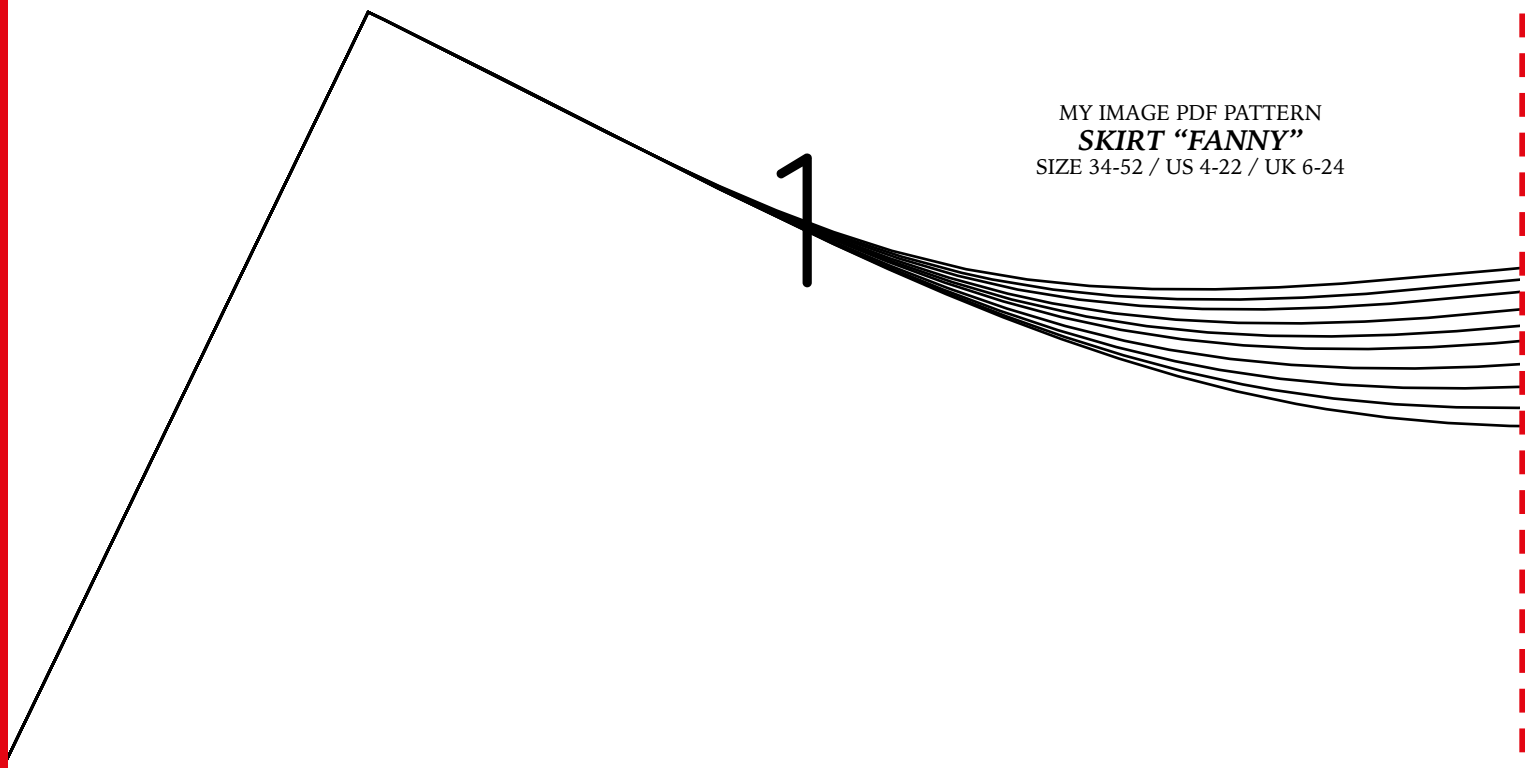

A

B

D

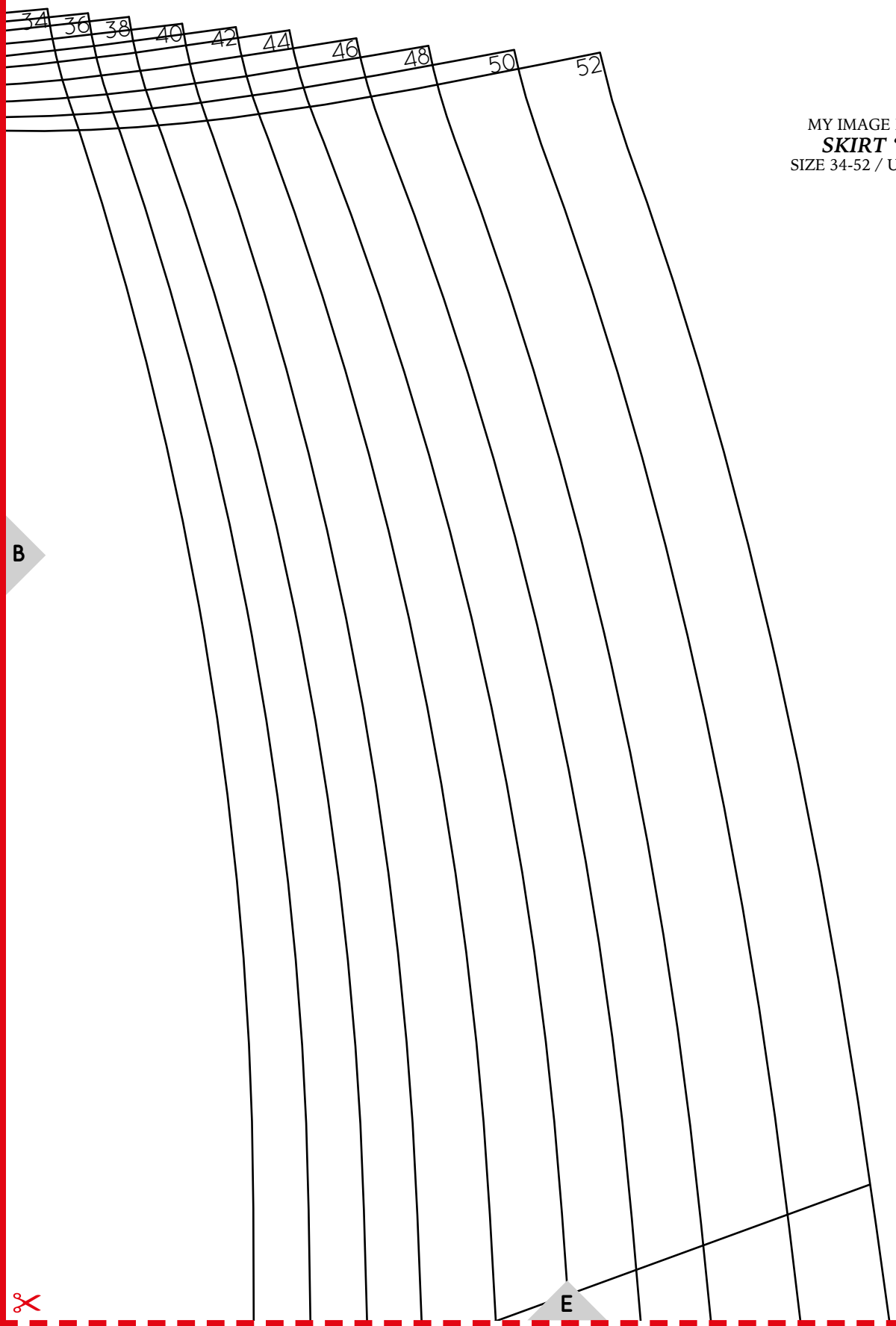

MY IMAGE PDF PATTERN

SKIRT "FANNY"

SIZE 34-52 / US 4-22 / UK 6-24

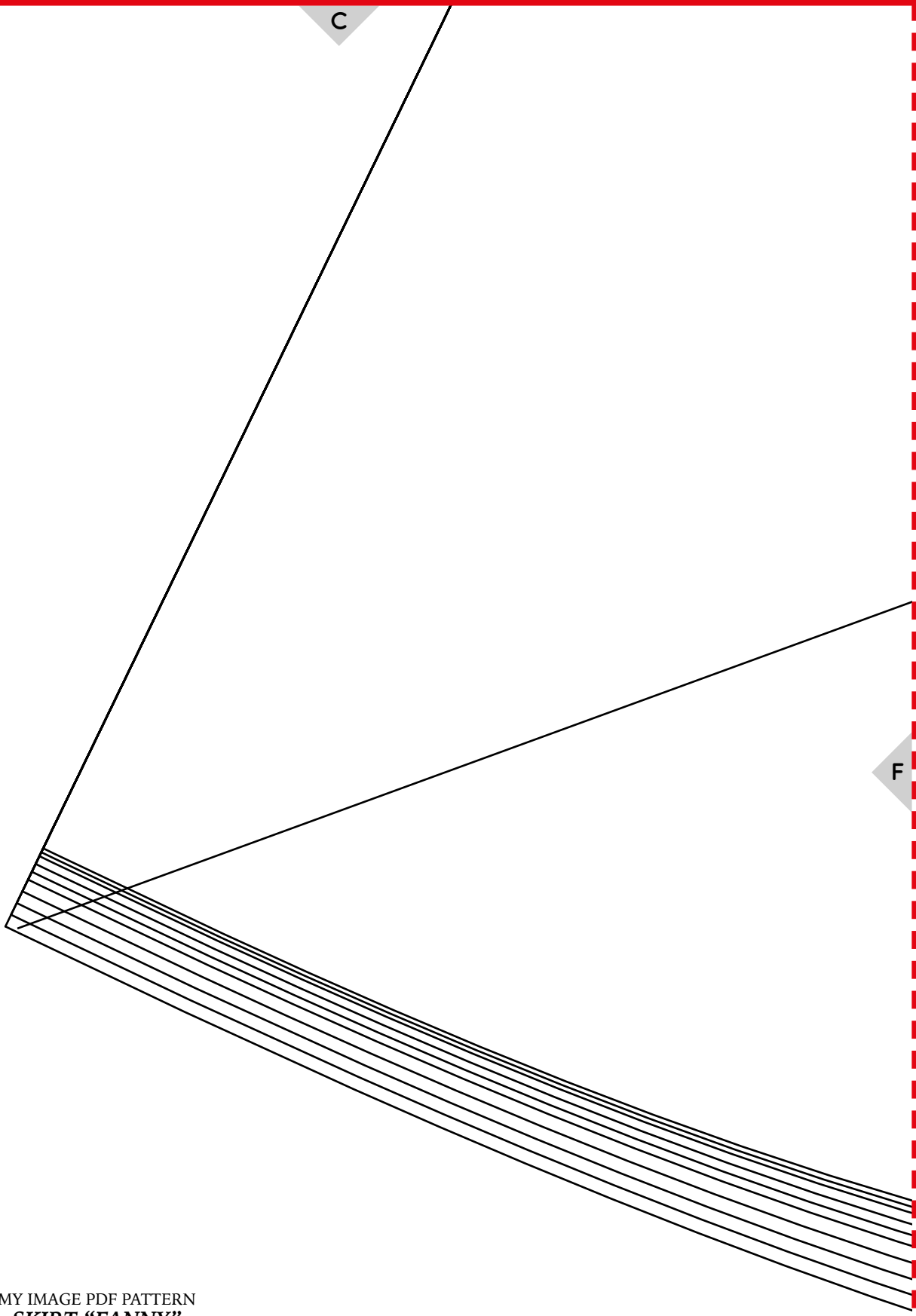

MY IMAGE PDF PATTERN
SKIRT "FANNY"
SIZE 34-52 / US 4-22 / UK 6-24

H

D

RVD/FL

MY IMAGE PDF PATTERN

SKIRT "FANNY"

SIZE 34-52 / US 4-22 / UK 6-24

F

G

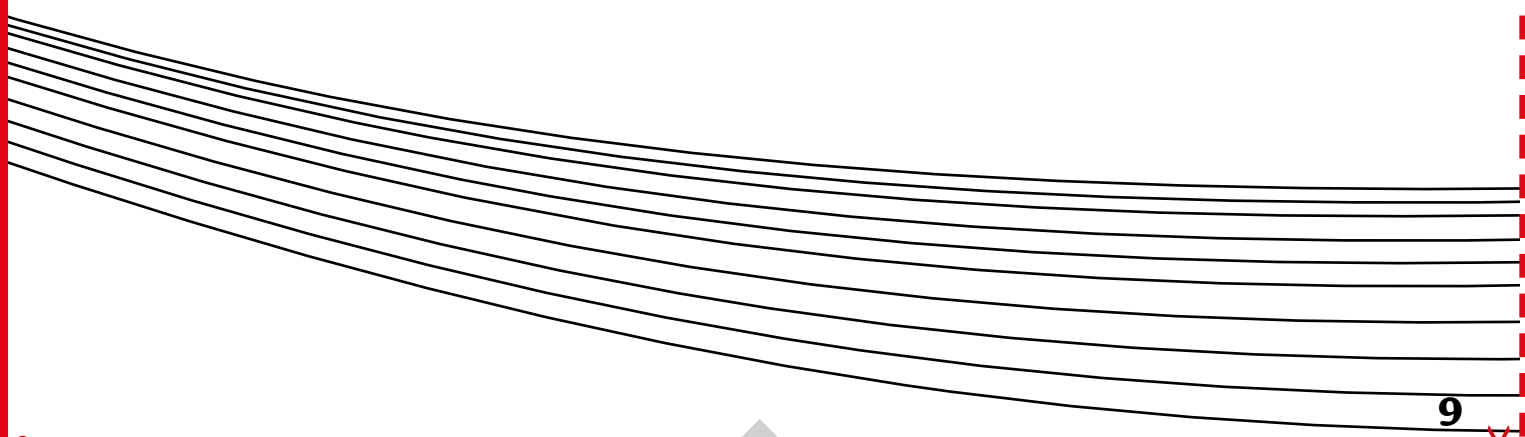

I

MY IMAGE PDF PATTERN

SKIRT "FANNY"

SIZE 34-52 / US 4-22 / UK 6-24

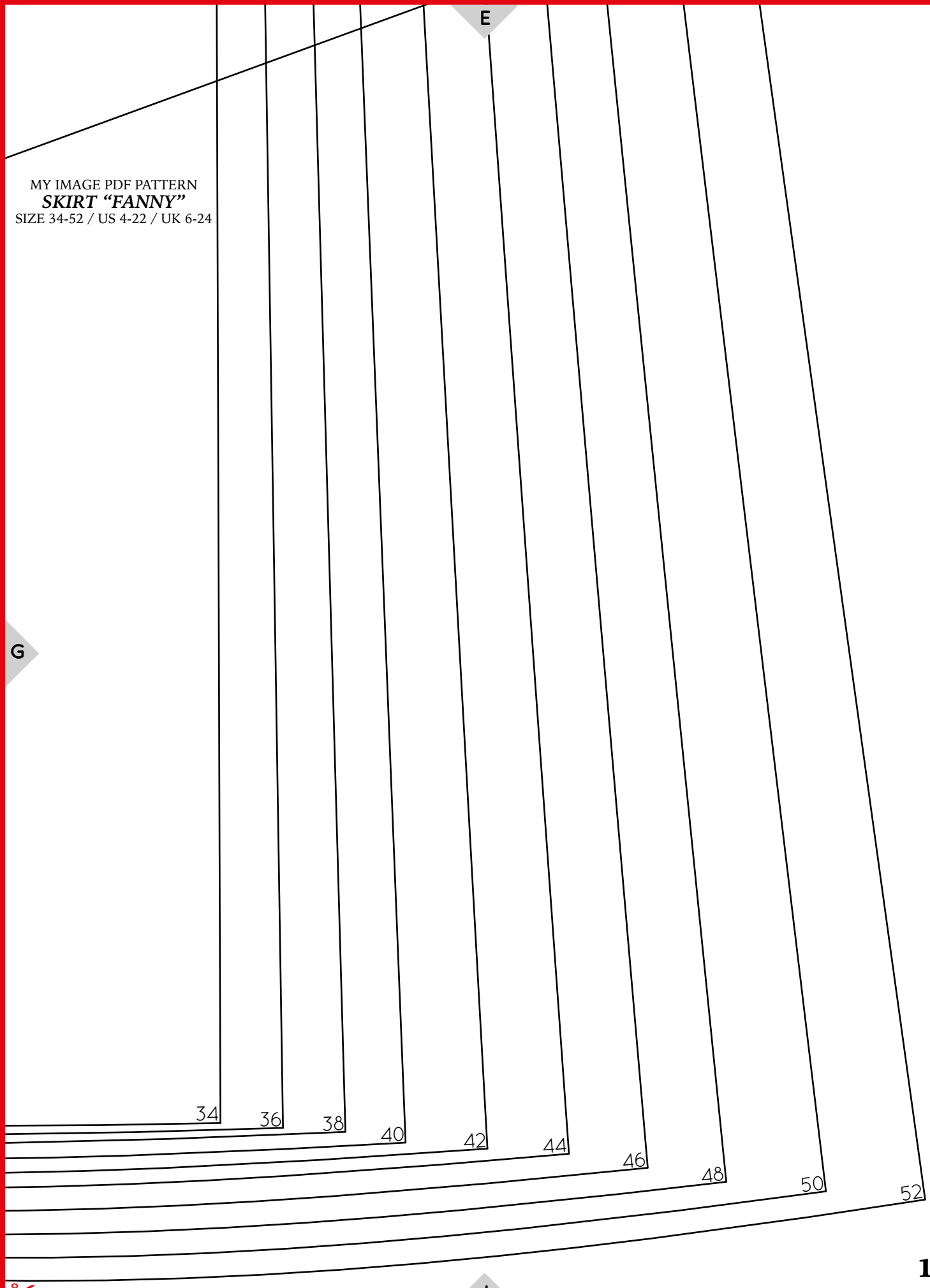

H

MY IMAGE PDF PATTERN

SKIRT "FANNY"

SIZE 34-52 / US 4-22 / UK 6-24

2

RVD / FL

K

I

K

L

34 36 38

MY IMAGE PDF PATTERN
SKIRT "FANNY"
SIZE 34-52 / US 4-22 / UK 6-24

J

MY IMAGE PDF PATTERN

SKIRT "FANNY"

SIZE 34-52 / US 4-22 / UK 6-24

L

40	42	44	46	48	50	52